2000,01,08
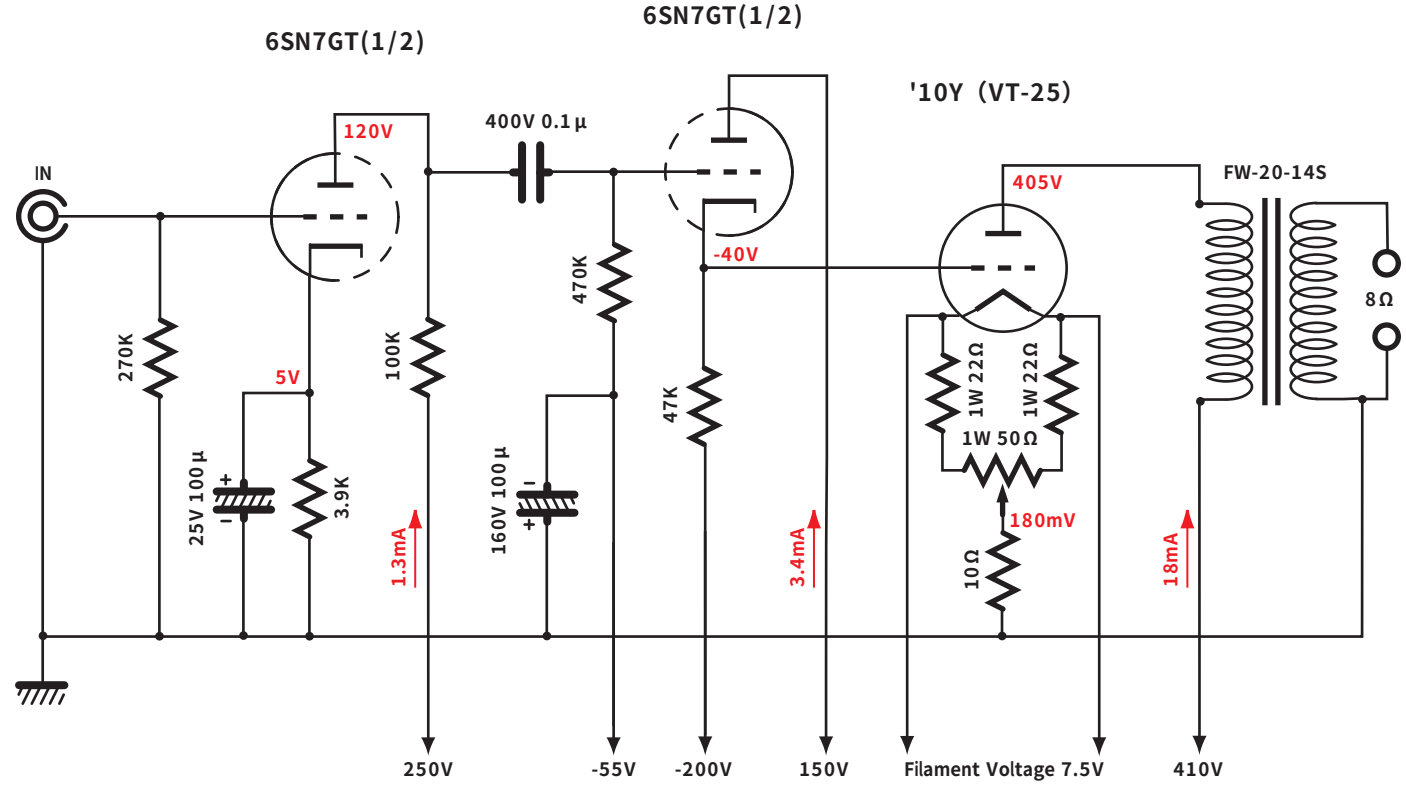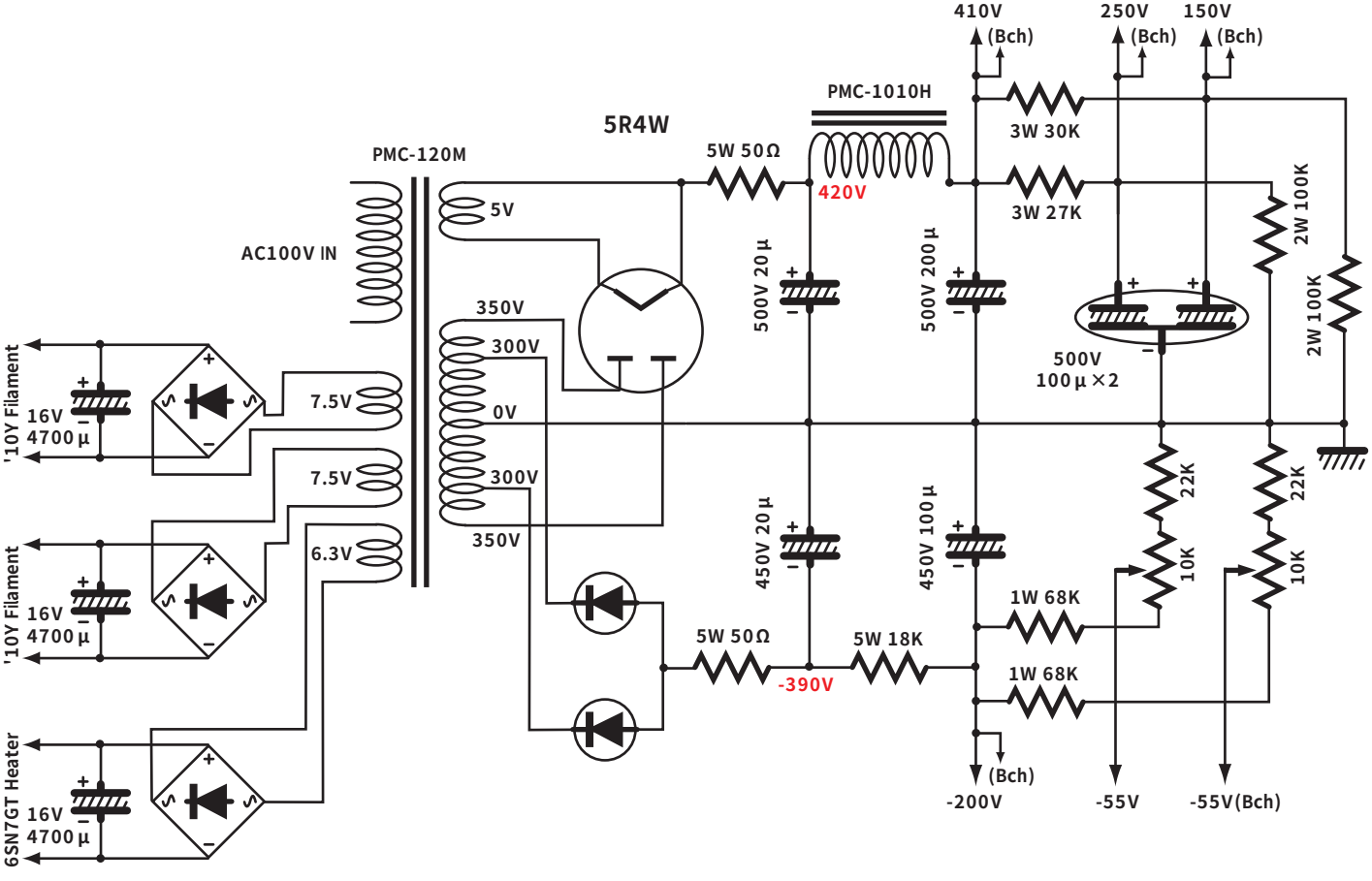
'10Y（VT-25）SingleEnded Amplifier